Index

Page	Schematics Page Name
01	Cover Sheet / Revision History
02	Top Level
03	
04	
05	
06	
07	
08	
09	
10	

01_Revision_History.SchDoc

Revision History

Rev.	Rel.	Date	Author	Description	Page(s)
1.1.1	RC00	2018-03-01	GV	- Initial design	

Ref. ILD6150 MOD

[No Variations]

V1.0

Infineon Technologies AG

PMM ACDC RDA AE1

Am Campeon 1-12 - 85579 Neubiberg - Germany

03/2018

<DOC_Preliminary>
<DOC_ConfidentialStatus>

LEGAL DISCLAIMER
THE INFORMATION GIVEN IN THIS DOCUMENT IS GIVEN FOR ILLUSTRATING PURPOSES ONLY. THE RECIPIENT OF THIS DOCUMENT MUST VERIFY ANY FUNCTION DESCRIBED HEREIN IN THE REAL APPLICATION. INFINEON TECHNOLOGIES HEREBY DISCLAIMS ANY AND ALL WARRANTIES AND LIABILITIES OF ANY KIND (INCLUDING WITHOUT LIMITATION WARRANTIES OF NON-INFRINGEMENT OF INTELLECTUAL PROPERTY RIGHTS OF ANY THIRD PARTY) WITH RESPECT TO ANY AND ALL INFORMATION GIVEN IN THIS DOCUMENT.

Infineon Technologies AG
PMM ACDC RDA AE1
Am Campeon 1-12 - 85579 Neubiberg - Germany

Title	Ref. ILD6150 MOD		
Variant	[No Variations]	Approved	<Appr.>
Size: A3	Document Name: 01_Revision_History.SchDoc	Rel.: <Rel.>	Rev.: V1.0
Author: GV			
Date: 11.10.2019 Time: 10:03:30	SVN Revision: Not in version control		
© Infineon Technologies AG 2014. All Rights Reserved.	Sheet of 2		

ILD6150_MOD.SchDoc

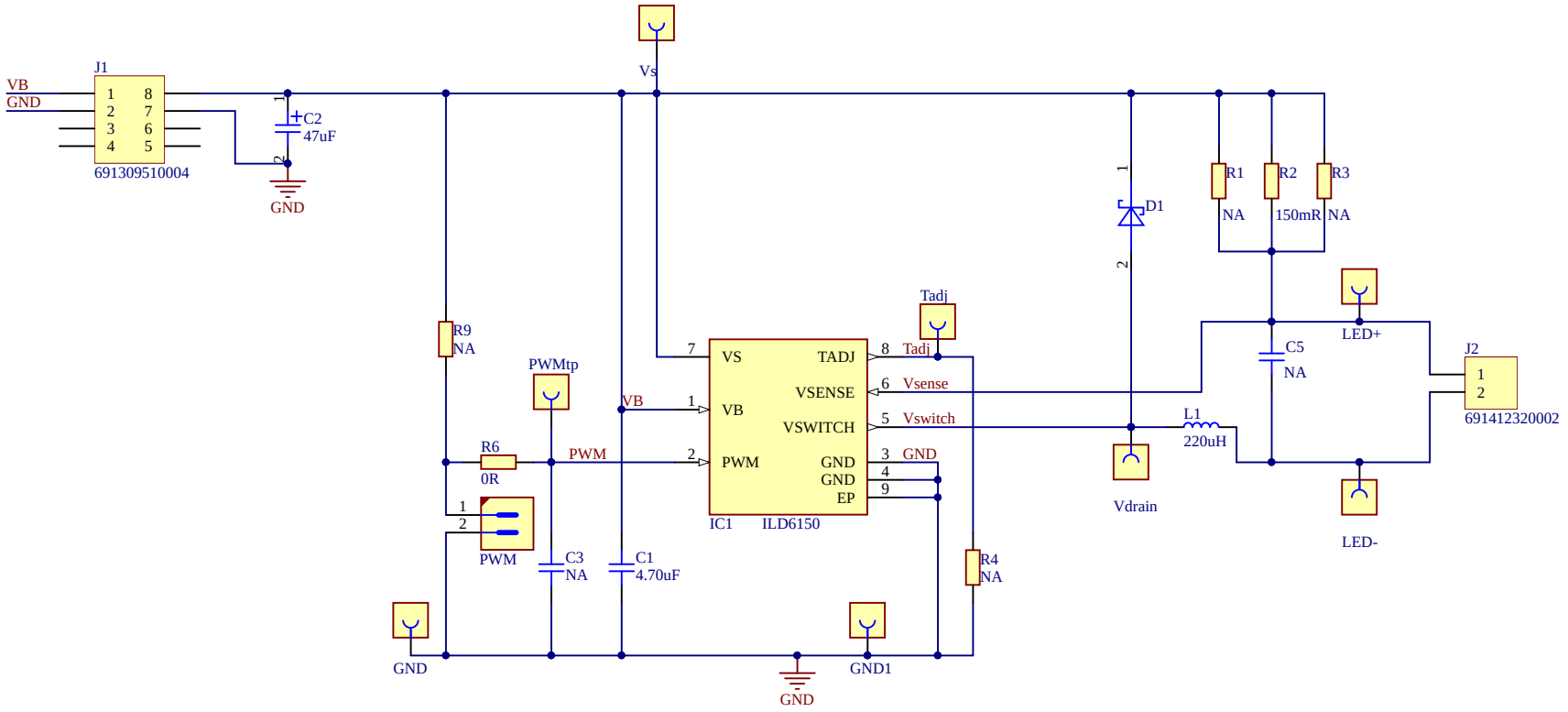



<DOC_Preliminary>
<DOC_ConfidentialStatus>

Infineon Technologies AG
PMM ACDC RDA AE1
Am Campeon 1-12 - 85579 Neubiberg - Germany

Title	Ref. ILD6150 MOD		
Variant	[No Variations]	Approved	<Appr.>
Size: A4	Document Name ILD6150_MOD.SchDoc	Rel. <Rel.>	Rev. V1.0
Author: GV			
Date: 11.10.2019 Time: 10:03:30	SVN Revision: Not in version control		

© Infineon Technologies AG 2014. All Rights Reserved.
Sheet 1 of 1

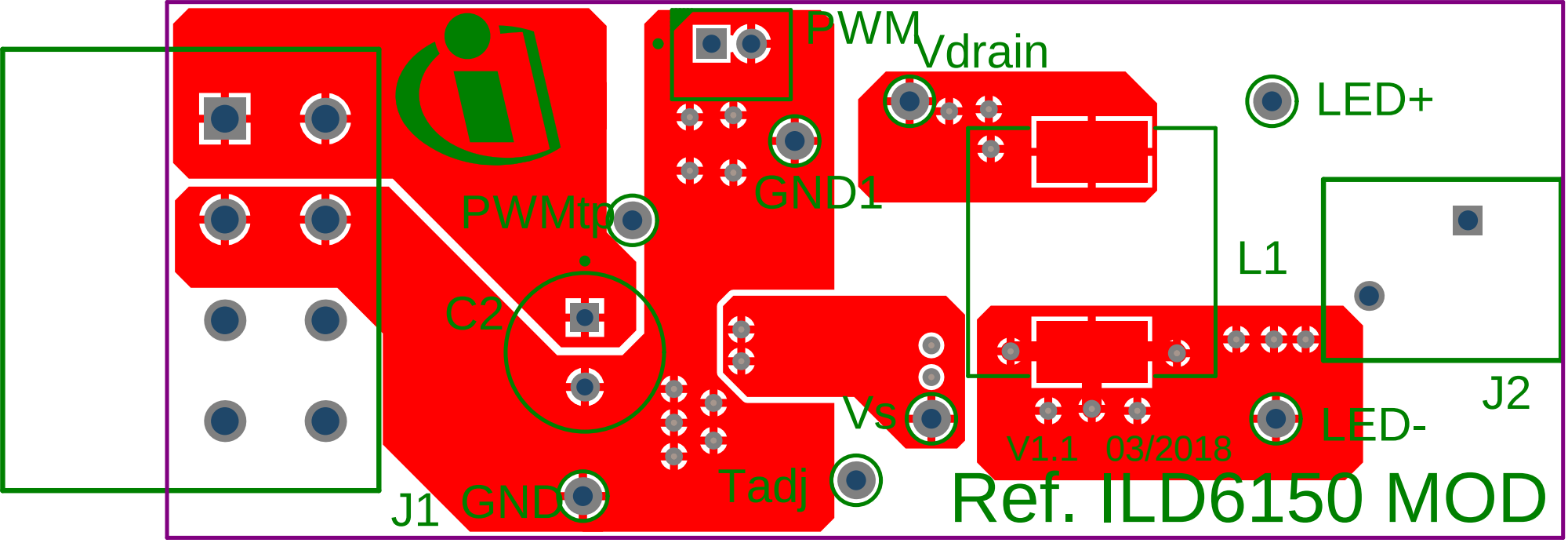
PWM
Vdrain
LED+
GND1
PWMtp
L1
C2
J2
Vs
LED-
V1.1 03/2018
J1
GND
Tadj
Ref. ILD6150 MOD

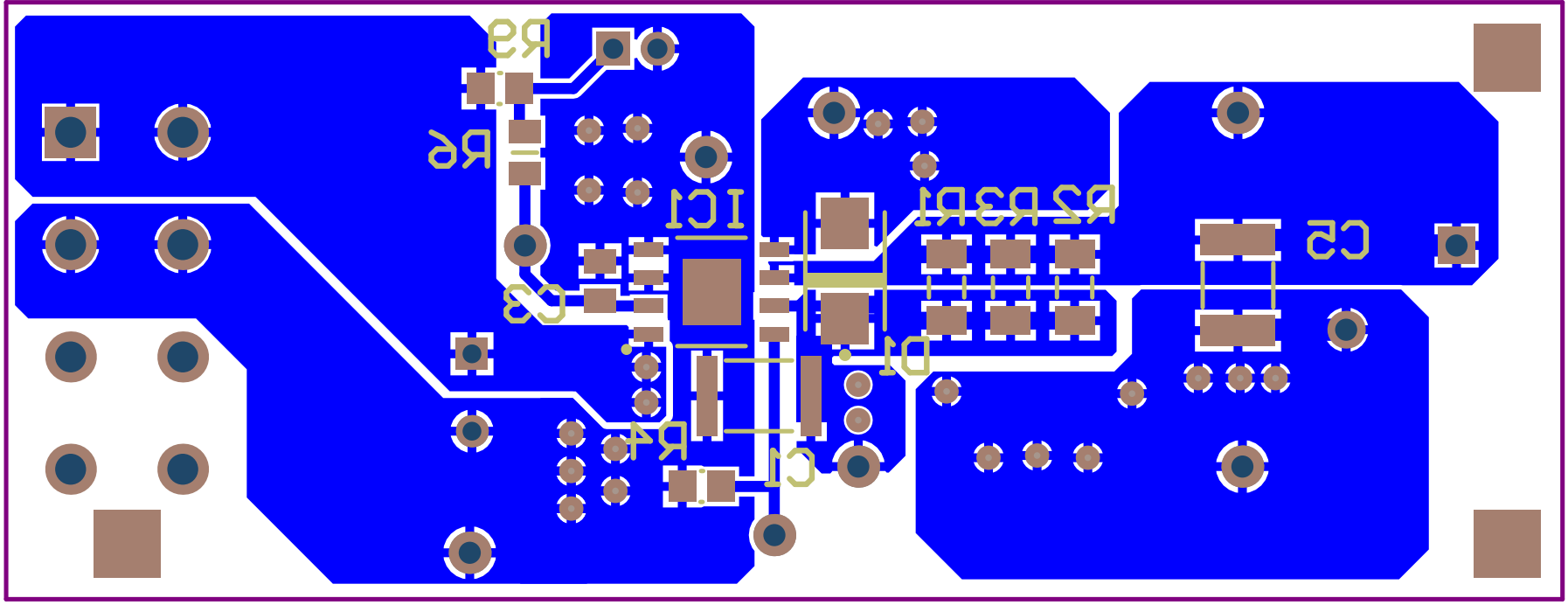
R3
R6
IC1
R2 R3 R1
C5
C3
D1
R4
C1